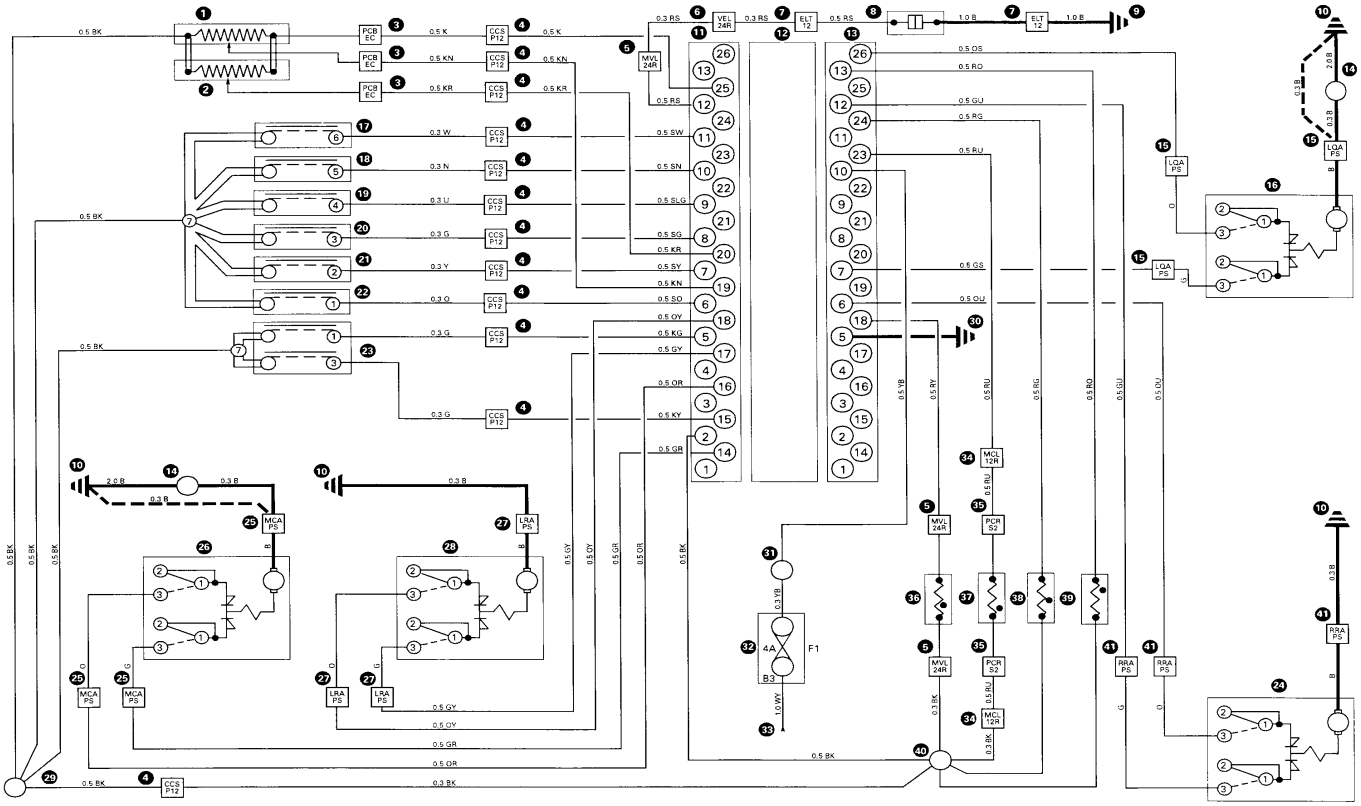Temperature Control