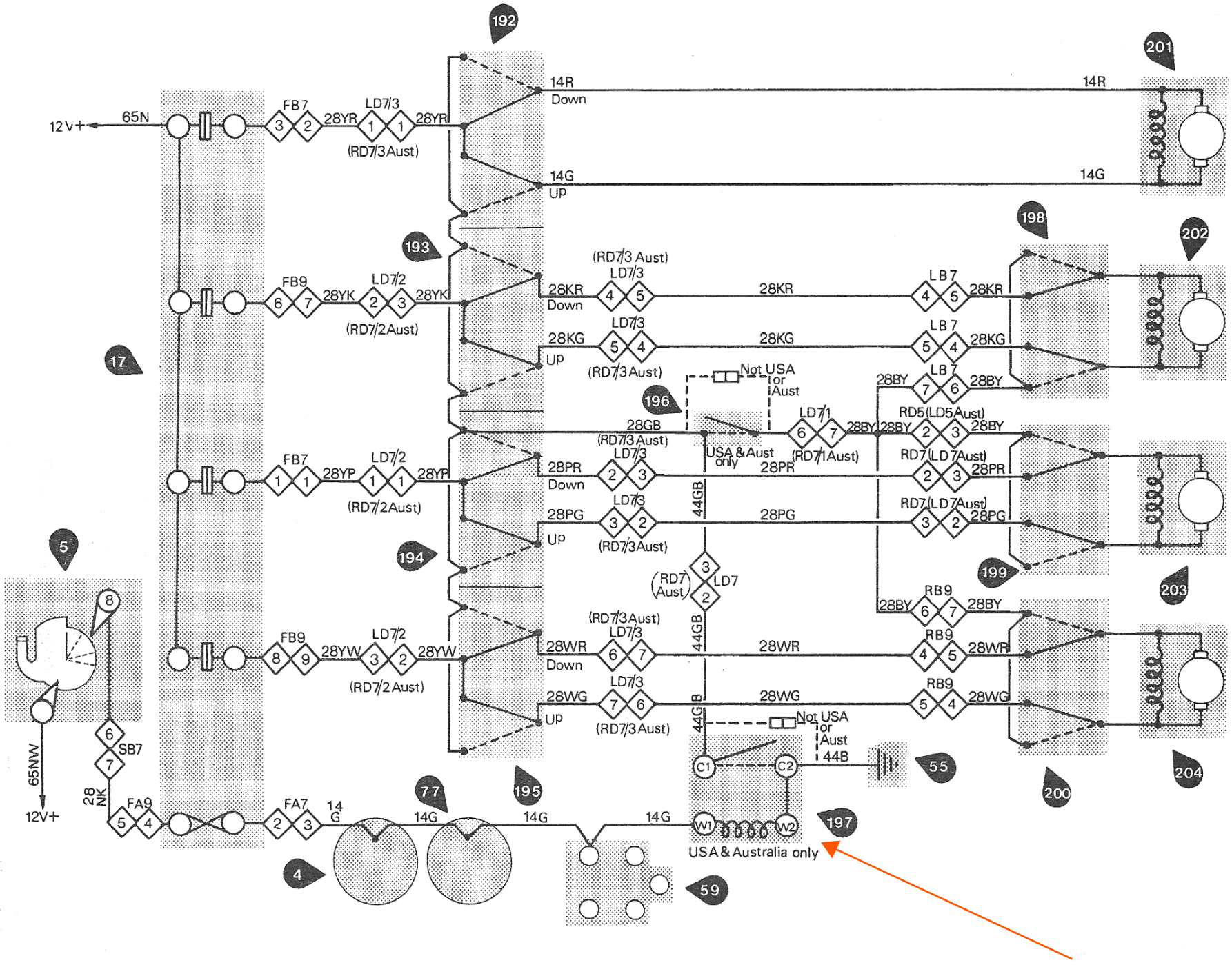

192
201
14R
Down
14R
12V+
65N
FB7
28YR
LD7/3
28YR
(RD7/3 Aust)
14G
UP
14G
198
202
193
(RD7/3 Aust)
LD7/3
FB9
28YK
LD7/2
28YK
28KR
Down
28KR
LB7
28KR
(RD7/2 Aust)
28KG
UP
28KG
LB7
28KG
17
(RD7/3 Aust)
Not USA or Aust
28BY
LB7
28BY
196
28GB
(RD7/3 Aust)
LD7/1
28BY
RD5 (LD5 Aust)
28BY
28BY
(RD7/1 Aust)
USA & Aust only
FB7
28YP
LD7/2
28YP
28PR
Down
28PR
RD7 (LD7 Aust)
28PR
(RD7/2 Aust)
28PG
UP
28PG
RD7 (LD7 Aust)
28PG
44GB
5
194
(RD7/3 Aust)
199
203
(RD7 Aust)
LD7
RB9
28BY
28BY
(RD7/3 Aust)
LD7/3
FB9
28YW
LD7/2
28YW
28WR
Down
28WR
RB9
28WR
(RD7/2 Aust)
28WG
UP
28WG
RB9
28WG
(RD7/3 Aust)
44GB
Not USA or Aust
44B
SB7
65NW
12V+
28 NK
FA9
FA7
14 G
77
14G
14G
14G
195
C1
C2
55
200
204
W1
W2
197
USA & Australia only
4
59